AD-A082 145 MASSACHUSETTS INST OF TECH CAMBRIDGE EXPERIMENTAL AS--ETC F/G 8/10
HYSURCH COMMUNICATION,(U)
JUL 68 E A OLSSON, W T QUINN N62306-67-C-0122
UNCLASSIFIED RN-36 NL

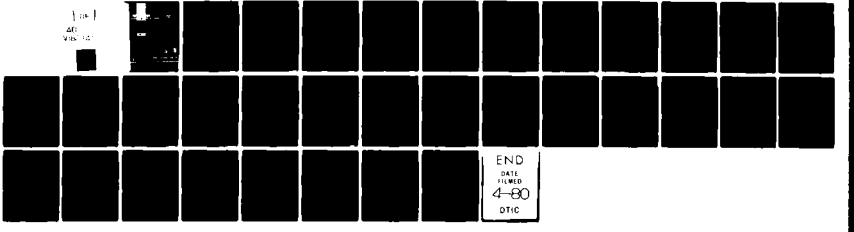

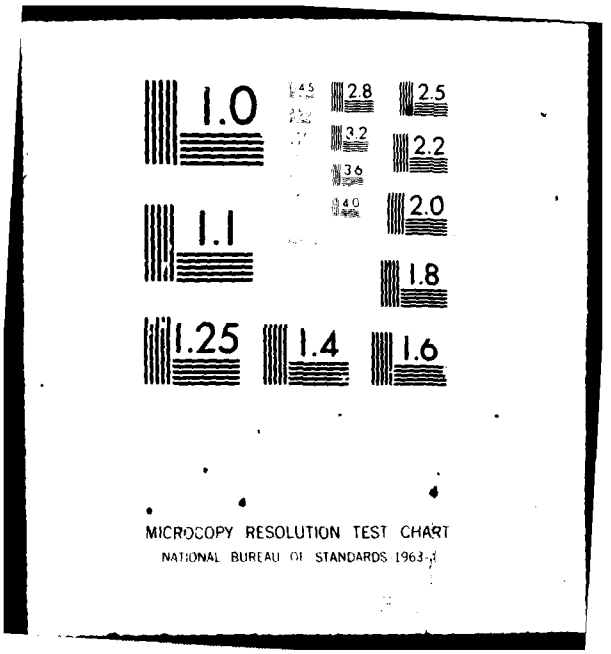
1.0
2.8
2.5
3.2
2.2
3.6
2.0
4.0
1.1
1.8
1.25
1.4
1.6
MICROCOPY RESOLUTION TEST CHART
NATIONAL BUREAU OF STANDARDS 1963-A

AD A082145

DDC FILE COPY

MASSACHUSETTS INSTITUTE OF TECHNOLOGY

LEVEL

DISTRIBUTION STATEMENT A
Approved for public release;
Distribution Unlimited

DTIC
ELECTE
MAR
S D
A

EXPERIMENTAL ASTRONOMY LABORATORY
MASSACHUSETTS INSTITUTE OF TECHNOLOGY
CAMBRIDGE 39, MASSACHUSETTS

14 RN-36

6 HYSURCH Communication

by

10 Edwin A. Olsson
William T. Quinn, Jr.

11 Jul[redacted]68

Contract 15 N62306-67-C-0122

12 34

DTIC
ELECTE
MAR 2 1 1980
S D
A.

A

387140

ABSTRACT

The communication requirements of HYSURCH are identified, ordered, and evaluated in context of possible system configurations. It is concluded that: (1) communication needs external to the HYSURCH operations are best satisfied by existing (or planned) long-haul Navy circuits; (2) intra-HYSURCH command and control is best effected by standard voice/teletype Navy equipments; and, 3) transfer of hydrographic data within the HYSURCH operation is best accommodated over a low-power, narrow-band dedicated data system integral with the HYSURCH system and controlled by HYSURCH computers.

Required terminal equipments for the dedicated data transmission system are described and procurement thereof recommended for both buoy sensors and sounding platforms.

I Introduction

The HYSURCH system is proposed as a means to reduce by an order of magnitude the time required to perform a hydrographic survey and to produce and disseminate coastal charts. In view of the accelerated nature of the operation, the efficacy of the system is dependent in large measure on the availability of reliable, real-time data transmission facilities. This Research Note identifies the fundamental communication requirements for the HYSURCH system and recommends specific custom designs in those areas where requirements are unique.

The proposed HYSURCH system comprises a mother ship and a fleet of sounding platforms. The mother ship serves both to support and coordinate fleet operations and to compile and produce coastal charts. The platforms will include both high-speed boats and helicopters; their mission is to gather expeditiously the data needed to specify the underwater topography and the shoreline of the survey area.

The transfer of information from the survey platforms and buoys to the mother ship and the transmission of directions from the ship to the platforms are the primary subject of this note. Section 2 explores the unique requirements that HYSURCH imposes on communications. Section 3 describes the interfaces between HYSURCH communications and various computers and data couplers within the system. Section 4 develops a proposed data-communication subsystem.

II Communication Requirements

HYSURCH communications requirements may be categorized by three operational functions: hydrographic data transfer within the survey area, command and control of HYSURCH force elements, and access to external facilities such as the base plant and local military command centers. These functions are separately addressed in the following subsections. It is concluded that a dedicated data transmission system uniquely tailored to the HYSURCH needs will best fulfill the internal data transfer requirements; whereas, on the contrary, command and control and external communication functions are adequately fulfilled out of the present Navy inventory.

2.1 Digital Data Communications

The HYSURCH concept features a number of high-speed survey platforms independently surveying depth as a function of position within a radio navigation network. A number of buoy-mounted packages are also employed to monitor tide, current and wave height at specific points in the area. The buoy-mounted navigation network is periodically monitored for movement; the mother-ship computer complex maintains a real-time ephemeris of the geodetic positions of the buoys.

The rapid-coverage nature of the HYSURCH charting operation requires transmission of selected platform data and periodic transmission of all buoy data to the survey ship for survey monitor and for support of chart-compilation operations. The monitor program makes use of gross trends in survey data -- obstacles, survey holidays and unsuspected shoal or deep waters -- to revise survey tactics and to redirect platforms so as to more efficiently orient survey lanes and cross-check lanes. This program thus requires the capability of occasional transmission of extraordinary data from the platforms and occasional transmission of redirection thereto. The determination and selection of extraordinary data is effected in part by the data-processing capability aboard the survey

platform and in part by direction of the monitor facility aboard the survey ship. The bulk of ordinary survey data may be stored on tape and transferred several times a day to the survey ship without significantly jeopardizing real-time operation. The low average data rates associated with periodic buoy reporting and occasional platform-to-ship and ship-to-platform communication requires a low-bandwidth communication system. The precision of the data and the real-time operational aspects of the systems require that the data be digitized for transmission. The 50 n.m. maximum separation between platform or buoy and ship suggests ground-wave transmission in the HF or MF band. The case for ground-wave transmission is developed in Appendix A.

There are operations envisioned in which surveyswill be conducted under wartime conditions with significant risk of platform loss. Under these conditions, a requirement for continuous real-time data transmission exists toobviate potential loss of the data. EAL considers that a system capable of servicing these circumstances will adversely prejudice the design of one tailored to service normal peacetime surveys (which constitute by far the bulk of NAVOCEANO's activities). Consequently, the proposed HYSURCH design (featuring low bandwidth transmission and tape storage for bulk data) addresses only the peacetime mission. A separate compatible subsystem for hazardous operations is described in Appendix B. The combat subsystem includes platform transceivers (which will interface where normally the tape recorder is employed) capable of high data-rate transmission. The subsystem also includes a special communications-control and data-storage computer for use on the mother ship with a high data-rate transceiver to accommodate real-time acceptance of all bulk data. This separate subsystem will not be considered further in the main sections of this note.

2.2 Voice Communication

It is assumed that all HYSURCH vessels, survey boats and processor ships, will be equipped with a standard complement of Navy communications equipment. The relegation of routine command and control traffic to existing Comm Nets relaxes the requirements

on the dedicated data transmission system to those peculiar to HYSURCH. Thus, such functions as mission initiation and termination, enroute and on-station reporting, fuel rendezvous and emergency instructions are readily accommodated over the HYSURCH operational area by ground wave propagation at MF or HF of standard double-sideband voice and/or FSK teletype or CW telegraphy. Such capability will therefore be tacitly assumed hereinafter and will be considered further only to the extent of back-up for the dedicated data system and possible time-shared operation.

2.3 External Communications

The ultimate objective of HYSURCH is accelerated dissemination of charts; a concomitant thereof is the requirement to support the communication of critical data between the HYSURCH ship and the base plant. The Navy and the DoD have operational systems to support these requirements. The NTDS (Navy Tactical Data System) provides for round-robin communication of digitized data among stations throughout an activities area. The modest bandwidth of the system renders it unattractive for transmission of cartographic coverage of an extensive area, but does permit transmission of critical data. The Defense Communication Agency (DCA) is operating a high-bandwidth communication system* for DoD which may be of great significance to HYSURCH for the transmission of graphics. This note will not further explore such systems affording external communications because it is believed that existing and planned systems (which are well documented) can service projected requirements.

---

*The satellite communication program, which is classified, maintains an office in the Navy: Navy Satellite Communication Program Coordinator (OP 94E).

III Computer Control of Data Communications

The HYSURCH Data Communication subsystem will service both interrogation of HYSURCH buoys and communications between the HYSURCH survey ship and platforms. The total information rate required to service both these requirements is nonetheless very low; this fact suggests the cooperative use by all "subscribers" of a single transmission channel operated in a half-duplex mode (push-to-talk type operation). The exercise of computer control (at the survey ship) over all transmissions, combined with the adoption of a suitable coding technique, permits high-efficiency utilization of the single transmission channel--------in the Shannon sense, a good match between source entropy and channel capacity is achieved thereby.

In this section, the nature of the communications (type and incidence) is described, word length and coding are established, and, consistent therewith, message formats and data rate defined.

3.1 Digital Data Transmission

All elements of the HYSURCH system (the ship, the platforms, the data buoys and the master-station navigation buoy) are equipped with communications transceivers. The transceivers include encoders and decoders. (The equipment is described in detail in Sec. 4.)

A primary function of the communication control computer on the survey ship is interrogation of the buoys and platforms in a timely manner. The buoy interrogation is periodic, perhaps as frequently as every 10 minutes. Platform interrogation should also be cyclic; since the platform cannot initiate transmissions, interrogation of each platform should occur at least once per minute to ensure essentially real-time communication of vital data.

The buoys, which represent the simplest data sources, transmit at a fixed format. After a specific buoy recognizes its address, it commands that the buoy data register (with fixed quantities in fixed positions) be transferred to the output register, that the message have code bits added, and that the resultant message be transmitted serially.

The data transmissions between ship and platform and between platform and ship may include a variety of intelligence; in all instances, the communications relate to data in storage in the platform computer or in the communications computer. The respective computer controls the assembly of tables of data words for transmission and the transfer of those words to the communication output register for encoding and transmission. If a particular platform has no data in storage for transmission (as is expected to be the normal case), the platform will transmit a no-data message.

Reception of messages by the ship or platform computers from the communication input buffer is similar to reception by the buoy equipment. When a specific encoder recognizes that it is being interrogated (on the platform) it interrupts the computer to accept the instruction or data word or series of words held sequentially in the communication input buffer..(The details of computer operation are provided in RN-25B, Electronic Data

Processing Requirements for HYSURCH.) In like manner the decoder on the ship interrupts the computer to accept a decoded message or to advise that a retransmission is required.

3.2 Data Word and Transmitted Word

A 24-bit word size has been selected for the platform computer and for the communication computer.* It is convenient to have the same word length for all subscribers on the HYSURCH communication channel, i.e., the buoys as well. It is developed in Sec. 4 that a significant improvement in transmission reliability (and, consequently, a greatly reduced requirement for retransmission) is achieved by utilization of a (30,24) Hamming code for the detection and correction of transmission errors. Consequently, a major task of the transceiver encoder is the addition of 6 Hamming code bits to the 24-bit message word and a major task of the decoder, is the decoding and correction, if possible, of the input message.

3.3 Typical Message Formats

In order to size the communication system, it is necessary to know the message sizes for various uses. Although it is not appropriate to finalize a data system design at this time, message formats are presented in this section which should be typical, in size, of those for the final system. Formats and procedures are presented for ship transmissions, data buoy transmissions, master-station buoy transmissions and platform transmissions.

3.3.1 Ship Transmissions

It is anticipated that three classes of messages will emanate from the communication computer:

1) a general message that requests transmission, acknowledges receipt of message and/or identifies a forthcoming ship's transmission--MESSAGE A,

---

* See RN-25B.

A

PURPOSE	LENGTH (BITS)	COMMENTS
Ship ID	6	
Acknowledge	6	Announces that last requested message was satisfactorily received
Designee	6	New receiver being interrogated
Task ID	6	Announces Purpose of message
Hamming Code Check Bits	6	
	30	One Word

2) the new master-station position coordinates to all platforms--MESSAGE B,

B

PURPOSE	LENGTH (BITS)	COMMENTS
Ship ID	6	
All Platform Code	6	Establishes that message is to all platforms
New X	18	2 ft in 100 mi
New Y	18	2 ft in 100 mi
Hamming Code Check Bits	12	
	60	2 Words

3) new direction to specific platforms (following transmission of message A where TASK ID announces that message C or message D is to follow),

New Lane -- Message C

C

PURPOSE	LENGTH (BITS)	COMMENTS
X_1	18	
Y_1	18	
X_2	18	
Y_2	18	
Hamming Code Check Bits	18	
	90	3 words

Specific Sounding Requested (at given X or y along lane, whichever is appropriate) - MESSAGE D.

D

PURPOSE	LENGTH	COMMENTS
X or Y ID	6	
X or Y	18	
Hamming Code Check Bits	6	
	30	One Word

3.3.2 Data Buoy

There are two types of data buoys anticipated. One is a current buoy, the other a tide buoy. Transmission formats are presented as MESSAGE E and MESSAGE F. It is estimated that as many as 30 buoys may be used in a HYSURCH survey.

Buoy-Data Estimates

E. Current		F. Tide	
Magnitude	10 b	Depth	12 b
Direction	8 b	Wave	6 b
ID	6 b	ID	6 b
	24 b		24 b
Hamming Code Check Bits	6 b	Hamming Code Check Bits	6 b
TOTAL	30 b	TOTAL	30 b

3.3.3 Navigation Buoy

The HYSURCH system proposes to employ an inverted hyperbolic radio navigation system with the slave stations buoy-mounted in shallow water and the master station moored out to sea (perhaps with a station-keeping system to control drift errors). Master station movement may be self-monitored by continually measuring the returns from the two slaves. Variation of the phase of the returns is a direct measure of master station motion along the base lines. (The slave movements will be maintained at less than 10 ft., an error not considered significant to survey navigation accuracy requirements.) If the master is not colocated with the mother ship, then a receiver-digitizer at the master station, comparable to that on the platforms, can be periodically interrogated by the mother ship to monitor movement.

The required resolution of range is 1/100 lane. A data limit of four lanes should be adequate -- a drift of more than $\pm$ 1000 ft. is highly unlikely. The resultant data format for transmission is shown as MESSAGE G.

G. Navigation Buoy Data

Range 1	9 bits
Range 2	9 bits
ID	6 bits
Hamming Code Check Bits	6 bits
TOTAL	30 bits

3.3.4 Platform Data

Only extraordinary information will be transmitted from the survey platforms to the survey ship. These may include

1. obstacle coordinates (MESSAGE H)
2. holiday coordinates (MESSAGE I)
3. depth information, either singular or specifically requested by the ship (MESSAGE H)
4. a summary of survey data following completion of each lane (MESSAGE J)

Position, Depth, Obstacle -- MESSAGE H

x Position	18 b	(2 ft. in 100 miles)
y Position	18 b	
Depth	10 b	(1 ft. in 1000 ft.)
Obstacle	2 b	(L and R)
	48 b	
Hamming Code Check Bits	12 b	
TOTAL	60 b	TWO WORDS

Holiday MESSAGE I

x Position	18 b	
y Position	18 b	
Duration	12 b	
Hamming Code Check Bits	12 b	
TOTAL	60 b	TWO WORDS

Lane Report MESSAGE J

Lane ID (x,y)	36	
Average Depth	10	
Lo Depth	10	
Hi Depth	10	
Boat ID	6	
Check bits	18	
	90 b	THREE WORDS

Also required is MESSAGE K, a one-word message signifying no data to be transmitted.

3.4 Data-Rate Determination

For purposes of sizing the communication system, the following estimate is made for message rates:

1. Data Buoy Interrogation

   30 buoys interrogated each 10 minutes
   1 word interrogation (A)
   1 word reply (E or F)
   6 words/minute rate

2. Navigation Buoy Interrogation

   1 Interrogation per minute
   1 word interrogation (A)
   1 word reply (G)
   2 words/minute rate

3. Platform Interrogation

   10 platforms interrogated once each per minute
   1 Word interrogation
   2 Word AVERAGE reply

50%	no message	K	1 word
25%	one report	H or I	2 words
20%	two reports	H or I	4 words
5%	lane report	J	3 words

   30 words/minute rate

4. Platform Direction

   a. 1 new master station position each 10 minutes
      2 words (B)
      2/10 words/minute rate
   b. new lane or sounding instruction on the average of once/minute
      4 words (A and C)

The total of these items is 42 words/minute. If a data rate of 30 bits/sec is chosen for the communication system (one word/sec), these estimates indicate that the communication channel will be 70% occupied fulfilling the one/minute interrogation criterion. On the basis of these estimates, each platform will be interrogated between one time and two times per minute for a 30 bit/sec continuous data rate.

IV RECOMMENDED SYSTEM AND PLANS FOR IMPLEMENTATION

From the broad spectrum of possible techniques satisfying the operational doctrine above defined, EAL has optimized a recommended "base-line" data transmission system featuring:

1. identical data transceivers in buoys, platforms, and ship;
2. operation at the upper end of the MF (medium frequency) band;
3. ten watt transmitters;
4. electronically tuned antennas;
5. differentially coherent phase shift keyed modulation (DPSK);
6. matched filter detection;
7. Hamming (30, 24) error correction/detection coding.

The resultant HYSURCH dedicated data transmission system is believed to offer the most cost-effective compromise of the several conflicting operational constraints. The rationale compelling this conclusion, rejected competitive techniques, and the proposed implementation of the recommended system are the subjects of this section.

4.1 Data Rate

The recommended data rate for the HYSURCH transmission system is 32 bits per second. Although considerably lower than conventional communication channels, it is precisely this fact that permits reliable operation over the longest path (50 n.m.) under worst-case conditions with only 10 watt transmitters. The exact choice of transmission rate is somewhat arbitrary; 32 b/s at once satisfies the traffic density requirements defined in Section III (42 wpm or 21 b/s), allows a generous margin (30%) for occasional retransmissions and infrequent traffic peaks, and maximizes the opportunity for utilization of off-the-shelf (power-of-two) subassembly designs by ultimate equipment suppliers. It is however noteworthy that system performance for most of the anticipated HYSURCH operations is relatively insensitive to the exact data rate; variations of $\pm$ 20% of the base-line rate will not seriously affect predicted performance. It is furthermore noteworthy that significant

changes, (e.g., an increase to 64 b/s) can be readily accommodated in the recommended implementation by a simple proportional change in the timing chain (see section 4.5). The attendant 3 db degradation in performance can be tolerated without adverse effect if any one of the worst case conditions is not encountered (Appendix A).

4.2 Buoy Data Terminal

The definition of the recommended buoy data terminal results from the consideration of sundry cost-performance trade-offs guided by engineering judgment. The paramount constraint on defining the characteristics of the optimal data transmission system is the evident need to minimize power requirements of buoy-mounted electronics Thus, a "good" performance trade-off might be one which exchanges a reduction in rf output power for added sophistication in signal processing (albeit at a slight cost penalty) while maintaining performance constant. Similarly, improvement in antenna efficiency achieved by electronic compensation of pitch and roll effects justifies the added cost in light of the consequent reduction in required rf power.

A brief illustration may serve to emphasize this design rationale. Assume, in context of a preconceived buoy size, that an allocation of battery capacity to the data transceiver of 50 ampere-hours (at 24 volts) is acceptable, but a requirement for several hundred ampere-hours is not. Thirty day operation thus limits the continuous energy drain to a rate of 1.5 watts --- sufficient to power the continuously operated receiver and the intermittently operated transmitter (approximately 0.2% of the time) at a ten watt level, but insufficient to accommodate a transmitter power requirement of 100-200 watts. Yet, in the absence of an error correcting code, ten watts is insufficient to maintain an acceptable message error rate under worst case conditions (see Appendix A). Therefore, for a small increase in cost and energy consumption, a suitable code should be adopted and the rf power output restricted to the ten watt level.

By such cost-performance trade-off analyses, EAL has evolved a recommended design of the HYSURCH dedicated data system which is considered optimum in the sense of convergence to a best compromise of conflicting constraints, i.e., cost, performance, and buoy power supply. Salient characteristics of the recommended system are described as follows.

4.2.1 General

As evidenced by the transmission analysis of Appendix A, the performance requirements of the HYSURCH dedicated data system can be met under worst operating conditions (longest range, summer night time) with a single 32 b/s channel at a carrier frequency of 3 MHz. A bit error probability of 10^{-3} should not be exceeded for 90% of the summer nighttime hours, in any geographical location, with ten watts of rf power driving a 30 foot (compensated) antenna.

4.2.2 Modulation

Differentially coherent phase shift keying (DPSK), in which a carrier phase shift of pi radians denotes a transition in the binary state of consecutive bits, is employed in the recommended system. The single disadvantage of DPSK with respect to the somewhat more common frequency shift keying (FSK) lies in a slight increase in circuit complexity. The several advantages, however, are compelling. DPSK affords a 3 db enhancement in performance over FSK, an economical means of achieving an effective increase in system gain equivalent to a factor of two increase in transmitter power. DPSK is amenable to facile implementation of a matched filter detector, affording thereby the minimum achievable bit error rate for a given energy contrast ratio. (E/N_o or, in this case, S/N.) Though affording 3 db poorer performance than coherent phase shift keying (PSK), DPSK obviates the need for a coherent phase reference by referencing each bit to the preceding one. Finally, it is noteworthy that the Navy Tactical Data System (NTDS) has standardized on DPSK; adoption by HYSURCH of DPSK thus reserves the possibility of compatible operation therewith.

4.2.3 Error Correction Coding

Based on the assumption of uniform error distribution* the expected bit error rate of 10^{-3} for worst case operation will result in a probability of correct message reception of 0.97. Three erroneous messages per hundred on average for worst case operations is considered unacceptable; even the order of magnitude improvement expected for the majority of (non-worst case) HYSURCH operations is still considered inconsistent with the general precision objectives. To avoid, as aforementioned, inordinate demands on transmitter power, EAL proposes the adoption of error correction coding. The (30,24) Hamming code recommended will correct any single error and detect two errors or any odd number of errors in a 30 bit word. The resultant probability of acceptance of an erroneous word under worst case conditions is reduced to an acceptable level of approximately 3 in 10,000. The attendant probability of retransmission, i.e., the detection of uncorrectable errors, is approximately 1 in 1000.

4.2.4 Antenna

It has been shown** that the signal strength emanating from a high Q whip antenna mounted on a buoy in sea state four may be subject to 20 db fades. To avoid the attendant performance degradation, the antenna must be broadbanded, either by decreasing the Q at a performance cost of some 10 db, or by electronically tracking the resonance shift. Consistent with the design rationale aforementioned, the electronically tuned antenna is recommended for HYSURCH buoys. It should be noted however that since atmospheric noise levels to which the HYSURCH data system is designed

---

* Though not strictly true in the presence of atmospheric noise, the assumption is reasonable for the narrow band system here considered.

** See W. T. Quinn memo to J. Hovorka, "Transmission Analysis for HYSURCH Navigation Test" July 1968

exceed receiver noise by several orders of magnitude, receiving antenna efficiency is of little consequence; the antenna compensation circuits will therefore be activated only during transmit periods in a consistent endeavor to conserve buoy batteries.

4.3 Platform Data Terminal

Despite the very significant difference between platform and buoys, i.e., manned versus unattended operation, it may be recognized that the described buoy data terminal completely satisfies the requirements of the platform-ship data link. The platform data terminal can be identical to that defined for sensor buoys. The ultimate savings to HYSURCH in both initial procurement and life cycle costs achieved through the recommended commonality of buoy-platform-ship data terminals are manifest.

In light of the fact that the primary constraint of minimum energy drain on the definition of the buoy terminal does not apply to either the platforms or the ship, some deviations from the recommended commonality might be considered. For example, the decoder could be eliminated from both buoys and platforms by adoption of the simple expedient of increasing mother - ship transmitter power by a factor of ten. Though the performance of the "down" link from mother ship to buoy would be slightly inferior to that of the "up" link, it is felt that this assymetry in link performance would not seriously degrade the data collection function. Simple interrogate commands with address headers constitute the entire repetoire of down link traffic to the buoys; failure to receive a response from an interrogated buoy would thus alert the mother ship to the need for retransmission.

4.4 Alternatives to the Recommended System

Some documentation of rejected alternatives to the recommended system may be here warranted.

The first approach by EAL was to seek an available "off-the-shelf" system competent to meet the needs of HYSURCH. A survey of the military inventory and of commercial equipment failed to uncover suitable equipment.

The second step, that of divorcing the buoy data collection function from the platform-ship communications, offered some promise of "piggy-backing" platform data transmissions on the voice command and control channel. Speech-plus-TTY is a standard technique wherein, typically, a 100 wpm teletype channel (75 baud) occupies a narrow (100 Hz) portion of the voice spectrum. A high performance teletype channel is thereby afforded at negligible impairment of voice quality.

As an alternative to the frequency division operation, time sharing of the voice channel by the data link was also considered Two such possible techniques were studied, periodic long-term pre-emption, and quasi-continuous short-term pre-emption, where short and long term are referenced to the shortest phoneme in the English language, approximately 40 ms. In either case, the voice channel would be entirely usurped for the duration of data transmission, some 1% of the time for transmission at an assumed rate of 2400 b/s of the 42 wpm derived in the preceding section. Thus, the long-term pre-emption method might interrupt a speaker (alerted thereto by an appropriate indicator) for a duration of two seconds every four minutes, or one second every two minutes. Such interruptions would prove somewhat annoying to speakers, but would not significantly degrade the voice link in light of its inherently low efficiency for information transfer. The observable interruptions would be entirely eliminated by the short-term pre-emption method, whereby one HYSURCH data word could be transmitted over the voice link each second at the 2400 b/s rate. The resultant 12.5 ms speech interrupt duration is so short compared to the majority of English language phonemes that voice channel users would barely detect the attendant degradation.

Since the voice communications equipment is assumed to be part of the standard equipment complement of the vessel as aforementioned, considerable economies might accrue to HYSURCH by adoption of one of these shared voice/data techniques for the

platform-ship data transmission. However, such shared operation is really suited only to those systems affording full duplex, point-to-point links; the constraints imposed by the shared operation on a half duplex (push-to-talk type) network, in terms of rigorous discipline required, deprive the voice communication net of the very operational flexibility it is intended to provide. Secondly, the shift of the burden of routine command and control operations from the data system to an independent standard voice communications system so relaxes the requirements on the platform-ship data link that the requirements therefore are readily fulfilled by low power, low cost data terminals. Thirdly, in no event can the telemetry requirements of the sensor buoys be satisfied by shared operation of the voice channel; since procurement of a unique data terminal for the buoys is mandatory, it makes sense to incorporate this same data terminal into the HYSURCH equipment complement for the platforms. It is therefore concluded that, in the interests of operational flexibility, system simplicity (and thus reliability), and ultimate operational economy, the platform voice and data transmission systems should be independent.

It should be noted, however, that such independence does not preclude provision of the capability for shared operations. Little more than an appropriate filter is required to interface the HYSURCH data terminal with standard voice communication equipment for shared frequency operation (the preferred method). A back-up mode would thus be afforded permitting continued operations in the event of (infrequent) anomalous propagation phenomena, or catastrophic failure of the dedicated data system on one or more platform to ship links.

4.5 Implementation

It is clear from the foregoing:

1. that a need exists for voice/TTY links between mother ship and all subordinate HYSURCH vessels, and that,
2. therefore all manned elements of the HYSURCH operation should be equipped with standard Navy communications equipment.

3. that a need exists for high speed transmission of graphics from mother ship to base plant, and that,
4. therefore access to TacSat Navy need lines should be made available to HYSURCH.
5. that transfer of data within the HYSURCH operational area can be handled reliably and economically only by a dedicated data transmission system, and that,
6. therefore procurement specifications should be forthwith prepared for a data terminal common to both buoys and sounding platforms.

Although detailed design and cost data exceed the intended scope of this note,* a block diagram of a suitable DPSK transceiver is shown in Figure 1.

A signal received by a buoy from the mother ship is conveyed via the duplexer, normally in the receive condition, to the receiver front end, comprising a wide band (approximately 10 kHz) limiter and rf amplifier. The wide band limiter serves as a clipper of noise impulses and affords some 10 db performance improvement in periods of high noise levels over a system operated without benefit thereof. The signal is then translated to a convenient i.f. by the mixer and fed to the commutator. The commutator, a pair of triggered analog gates, serves to channel alternate bits to one or the other of the pair of integrate-and-dump filters; while one filter is integrating the current bit, the other is "ringing" energy of the preceding bit, preserving thereby its phase for DPSK demodulation. The integrate-and-dump filters are sampled and discharged at the appropriate times under control of the timing generator. The output of the DPSK demodulator is fed to the Hamming decoder from which a correct or corrected message is shipped to the fixed format registers for address validation and subsequent triggering of the transmit channel and release of

---

* Expenditure of the required level of effort for development thereof is considered unwise prior to general acceptance in principle of the proposals and recommendations herein contained.

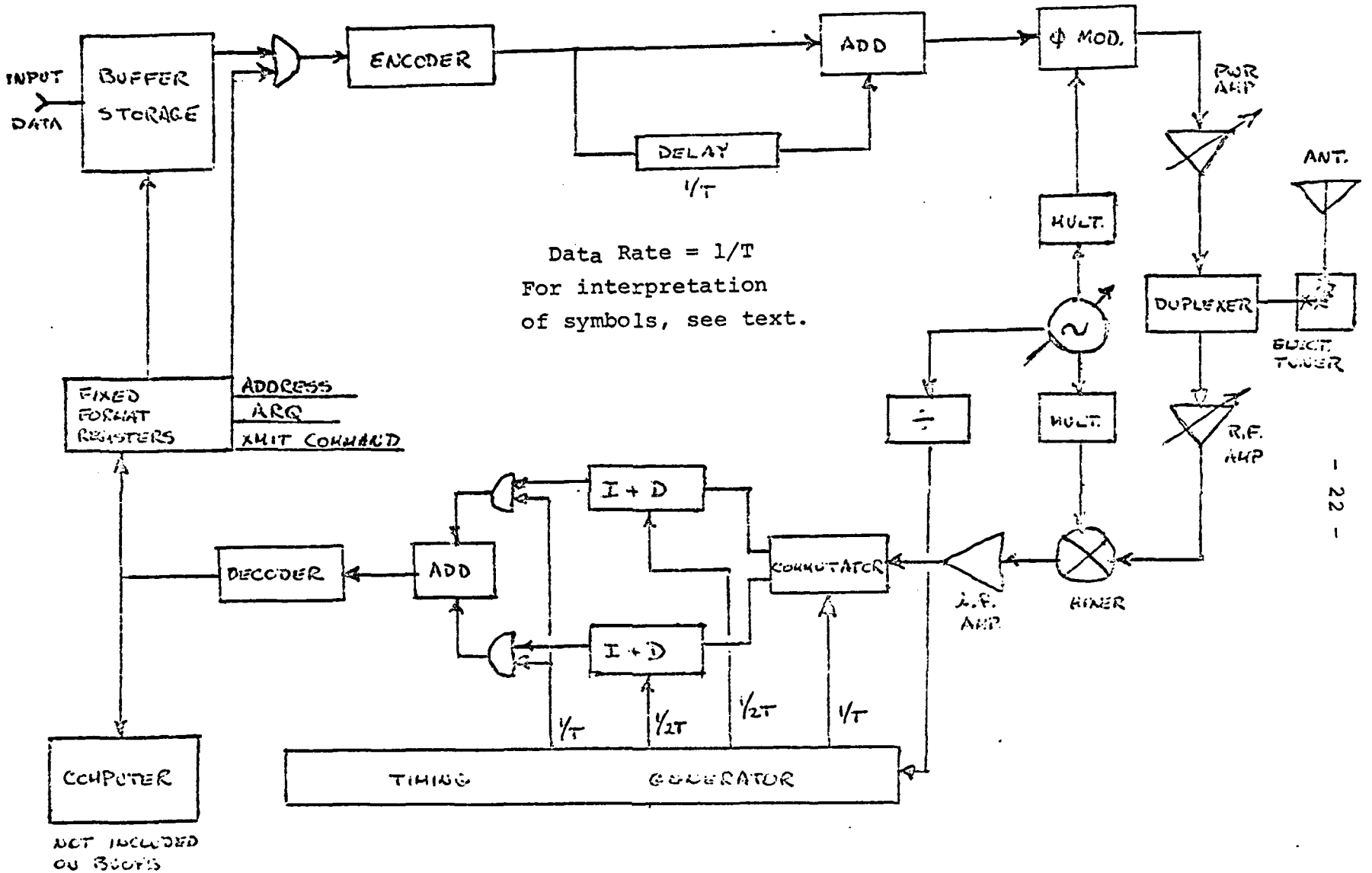

FIGURE 1 HYSURCH DPSK DATA TRANSCEIVER

stored data thereto. Any decoded word containing detected but uncorrectable errors activates a fixed format automatic repeat request (ARQ) for transmission to the message originator (mother ship).

Finally, no claim for either originality or optimality of the illustrative DPSK transceiver is herein claimed. There are a variety of ways in which the required transceiver could be implemented; that herein described is intended only to demonstate state-of-the-art feasibility. On the advent of concurrence in the proposed technique, EAL would undertake the detail performance specifications and estimated fabrication costs without constraining the ultimate supplier to a specific design.

APPENDIX A

TRANSMISSION ANALYSIS

Selection of the optimal frequency band for operation of the HYSURCH dedicated data system has been detailed in RE-39.* Briefly, line-of-sight modes (VHF, UHF) were eliminated on consideration of required antenna heights at all terminals (500 to 600 feet); sky-wave modes (HF) were eliminated as most HYSURCH ranges for most of the time would fall within skip distances; a ground wave propagation mode was therefore selected. For any given ground wave range, an optimum operating frequency exists. At frequencies above the optimum, the increase in ground wave losses more than compensate the reduction in atmospheric noise; at frequencies below the optimum, the converse conditions apply. For HYSURCH operations over the longest expected range (50 n.m.) in the worst noise environment (South East Asia, summer night time), the optimum operating frequency lies at the upper end of the MF band (3 MHz) which, fortuitously, is embraced by world wide allocations for maritime mobile operations. Thus, no difficulties are anticipated in obtaining required frequency assignments (primary and back-up), especially in light of the very narrow bandwidth of the HYSURCH dedicated data system.

The results of the transmission analysis are presented in Table A.1. The required performance is based on the assumptions of (30,24) Hamming encoded data, exhibiting a bit error probability of 10^{-3}, achieved under worst operating conditions (longest range, worst noise environment) by matched filter detection, a wide-band, hard-limiting front end, with a conservative demand on energy contrast (S/N) of 15 db. For the assumed transmitter power of 10 watts and the assumed electronically tuned antenna (see Section 4.3.4), the analysis renders the expected median signal-to-noise ratio (s/N). The estimation of the standard deviation for each paramcter considered to be a random variable permits calculation of the standard deviation

---

* EAL Report RE-39, "A System Concept for HYSURCH," B. F. Blood, Feb. 68, pps 444 - 446.

TABLE A.1

TRANSMISSION PERFORMANCE ANALYSIS

(f = 3 MHZ σ = 4 mhos/m ϵ_r = 80 d = 90 km)

	Mean Value	Std. Deviation
Transmitter Power (10w)	+10 dbw	1.0 db
Antenna Efficiency (30' whip, compensated)	-5 db	1.0 db
System Degradation	-1 db	0.5 db
Path Loss	-80 db	2.0 db
Shadow Loss	-10 db	1.5 db
SIGNAL POWER	-86 dbw	
kT	-204 dbw	0 db
B	+15 db	0 db
F_{am}	+73 db	4 db
D_u	+6 db	2 db
NOISE POWER	-110 dbw	
Median S/N	+24 db	5.3 db
Required S/N	+15 db	
Margin	9 db	
Service Probability	0.92	

of the expected median S/N (assuming statistical independence of all random variables) by which the serice probability is computed. The service probability, that probability with which the required performance will be achieved for the specified time availability (90%), is computed by invoking the central limit theorem and computing the standard normal deviate from the ratio of the indicated S/N margin and the standard deviation of the median S/N.

The following explanatory notes may facilitate interpretation of the analysis results.

Transmitter power: power delivered to a matched antenna.

Antenna efficiency: the ratio of the vertically polarized far field to that excited by a lossless monopole driven by the same transmitter. Note that this efficiency does not include any gain relative to an isotropic radiator since the path loss has been computed relative to a lossless monopole.

System degradation: allows for some 25% reduction in total system gain due to sundry nonoptimum operating conditions (transmitter or receiver detuning, antenna mismatch, etc.)

Path loss: accounts for the diffraction attenuation over an an assumed smooth earth with relative dielectric constant of 80 and conductivity of 4 mhos/m, typical of temperate waters, conservative for tropical waters, and somewhat optimistic for arctic waters.

Shadow loss: provides an allowance for possible land masses intervening between mother ship and buoys or platforms;

Signal power: is the resultant expected received power in db relative to 1 watt;

kT: is the thermal noise in a 1Hz band for an assumed receiver temperature of 288° Kelvin;

B: accounts for the increase in noise power in a 32 Hz band relative to that in a 1 Hz band;

F_{am}: is the median expected atmospheric noise relative to kTB in south East Asia in the summer night time;

D_u: derived from the empirical amplitude probability

distributions of CCIR 322*, is the allowance required to ensure that the computed noise power will be exceeded less than 10% of the time.

Noise power: is the resultant total noise power, by which the median S/N is computed.

The results of the transmission analysis of the HYSURCH dedicated data system as evidenced by Table A.1 are conducive to a summary statement of expected performance in terms of three probabilities; with probability 0.92 (service probability) a bit error probability of 10^{-3} (grade of service) will not be exceeded for 90% of the time (time available).

It should finally be noted that the analysis is generally conservative; the majority of HYSURCH operations will not encounter the worst combination of propagation conditions on which the analysis is necessarily based. This fact invites possible economies in the implementation of the HYSURCH dedicated data system at the expense of worst case performance. If for example, the shadow loss allowance could be dropped (clear sea path operationally demanded), or a worst case service probability of 50% tolerated (increasing required retansmissions), the buoy antenna could be reduced in height by a factor of two, or the transmitter power reduced by a factor of ten.

Such refinements notwithstanding, it is evident that the data transmission needs of HYSURCH can be met with high confidence and high reliability with the postulated dedicated data system.

---

* World Distribution and Characteristics of Atmospheric Radio Noise, International Radio Consultative Committee 10th Plenary Assembly, Geneva, 1963, International Telecommunication Union, Geneva, 1964.

APPENDIX B

THE COMBAT SYSTEM

The differences in the HYSURCH system operating in friendly or hostile waters are so vast that EAL elected to distinguish the two and thus avoid prejudice of the base-line (peace time) system with combat-peculiar requirements. Of the several possible approaches to satisfy the combat operational need for continuous real-time transfer of all (edited) hydrographic data from buoys and platforms, EAL recommends the minimal-impact approach, ie., that most closely resembling the peacetime system and thus demanding minimum change thereto. The minimal-impact approach to the combat system is characterized by the following changes to its peacetime counterpart:

- increase in transmitter power (by 10 db to 100 watts);
- increase in data rate (from 32 b/s to 2400 b/s);
- decrease in predicted performance (by 9 db);
- retention of base-line system hardware.

Details of the recommended system and rejection rationale for alternatives are addressed herein.

B.1 Combat System Data Rate

A data rate objective of 2400 bits per second is assumed for the HYSURCH combat environment dedicated data system. Although somewhat higher than required for the standard HYSURCH operation, the provision of a 2400 b/s capability for the combat system is considered prudent. In the first place, it satisfies with comfortable margin the highest anticipated hydrographic data acquisition rate for high obstacle density; in the second place, it is the fifth exponential of the function 75×2^n and thus presages compatibility with the many systems to be operated at this coming military standard rate; finally, it is the 80th multiple of the base-line data rate (32 b/s) and thus can be generated by the peacetime system with a simple switched by-pass of appropriate divider stages in the timing generator.

B.2 The Recommended System

In addition to the timing change required to achieve the higher data rate as above discussed. The minimal impact approach to the combat requirements consists simply of the addition of a power amplifier to the base-line system to afford a 160 watt capability. With this configuration, required performance would be achievable under the worst combination of operational conditions (in the proximity of South East Asia, in the summer night time, with an intervening land mass, at the longest range of 50 n.m.) with a service probability of 50%. (See Appendix A.) However, violation of any one of the worst case conditions would ensure reliable performance of the recommended combat system with high service probability. For example, restriction to daytime operations, or, reduction in maximum range of operations to 20 n.m., while all other worst case conditions prevail, would afford performance of the combat data transmission system at least equivalent to that of the peacetime system operated under worst case conditions.

For these reasons, it is believed that the recommended modest increase in transmitter power (to 100 watts) combined with a modest degradation in capability for worst performance, to achieve the required increase in transmission data rate, affords a sound, cost-effective compromise solution to the combat system requirements.

B.3 Alternatives to the Recommended Approach

An attractive new system is afforded if combat operations permit line-of-sight separation of the remote terminals. One watt transmitters and short antennas (1 foot) would suffice to ensure a high quality data transmission link at the lower end of the UHF band (300 - 400 MHz). The difficulty lies in establishing line-of-sight. Given an airborne relay (e.g., helicopter dispatched from the mother ship), there is no problem; stationed over the approximate midpoint of the HYSURCH operational area, the airborne relay would have to maintain a minimum altitude of only 500 feet to establish the UHF paths between remote terminals afloat.

In the absence of an airborne relay, antenna heights must be increased and the maximum range reduced. If, for example, the maximum operating range between platforms and mother ship is reduced to 20 n.m., line-of-sight coverage could be established with 60 foot antennas on all terminals, or with 40 foot antennas on platforms and buoys and 100 foot antenna on the mother ship (height calculations assume "average" tropospheric refraction).

If the line-of-sight restriction on the new system approach should prove too constraining on operations, the maximum range could be attained by a hybrid of the base-line dedicated data system and the existing voice/TTY equipments postulated for normal command and control functions. Instead of sharing the voice band as discussed Section 4.4, the 2400 b/s HYSURCH data would supplant the voice channel for the duration of the HYSURCH operation. The only required modification to the existing HYSURCH data terminal would be a simple step increase (of a factor of 80) in the timing generator, readily effected by a single, switched stage in the divider chain. Given this added flexibility, the transition from the base-line system to the combat system could be effected with virtually no other change to the HYSURCH data terminals.

Although either of these alternative approaches would satisfy the needs of the combat system, neither affords the simplicity, independence, and cost-effectiveness of the recommended approach. The UHF operation, while offering the best performance, is at once dependent on the existence of an airborne relay (or inordinate antenna heights) and requires procurement of an entirely different HYSURCH data system. The hybrid technique is dependent on the availability of an appropriate voice bandwidth link and, depending on the characteristics thereof, probably affords inferior performance to that of the recommended system. For these reasons, EAL concludes, the recommended modification of the base-line HYSURCH dedicated data system to accommodate the requirements of combat operations represents a "best" compromise solution.

B.4 Procurement Specifications

The timely adoption of the recommended technique for conducting HYSURCH operations in a hostile environment may ensure the facile transition from peace to war mode. Though conceptually simple, the recommended step increase in transmission data rate translates to hardware in certain nontrivial ways. Thus, it is desirable that procurement specifications for the base-line dedicated data system reflect the possible augmented capability. All rf components, i.e., antenna, tuning circuits, duplexer, and associated transmission lines, should be properly derated to ten times the nominal power and 3.2 times the nominal voltage required for the base-line system. All functional circuits sensitive to data rate, i.e., timing, modulator, demodulator, coding/decoding logic, etc., should afford the dual rate (32 b/s and 2400 b/s) capability. Modularity and packaging should be so specified as to permit the addition of the 100 watt power amplifier and associated power supply without compromise of interfacial subassembly integrity.

All such considerations can be easily accommodated in the procurement specification by the simple expedient of requiring the capability of dual power, dual data rate operation, notwithstanding the initial procurement of low rate/low power equipment only.